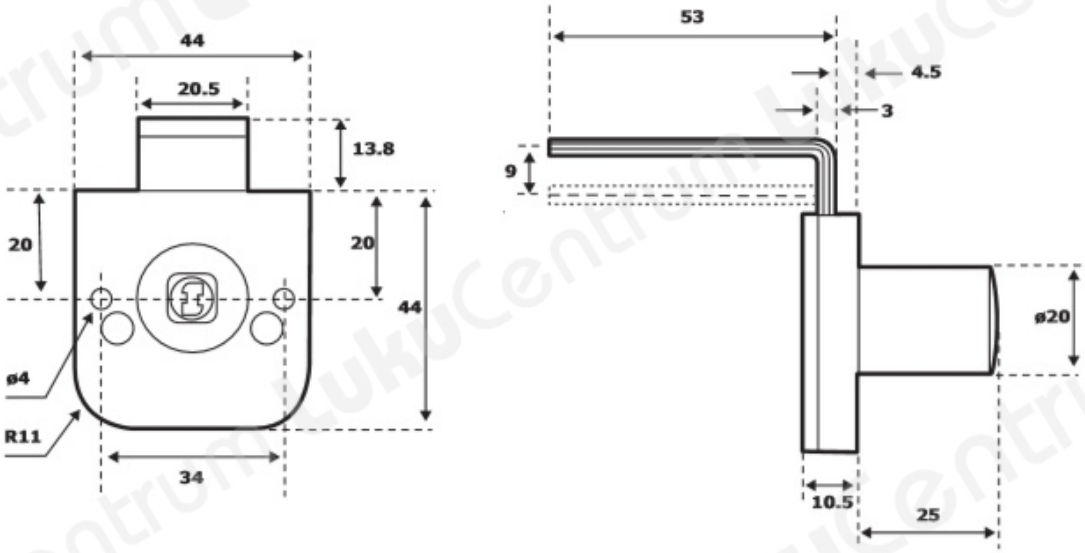| TOOTENIMETUS | SOODUS | HIND |
|---|---|---|
| Cabinet lock ABLOY OF234N Protec (w/o keys) | | 0.00 ? |
| Cabinet lock ABLOY OF234N Protec (w 2 keys) | | 0.00 ? |