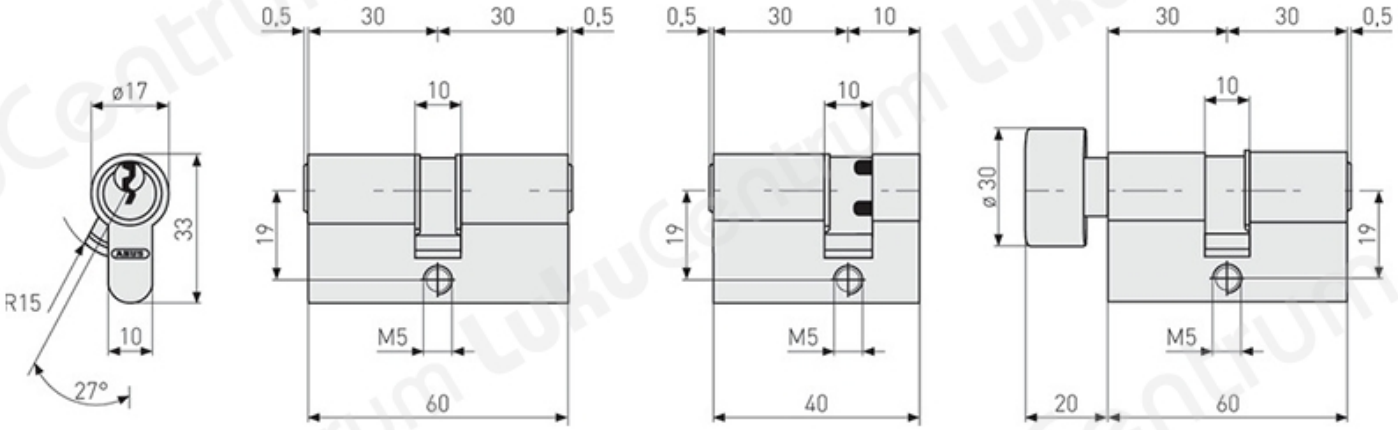TOOTENIMETUS	SOODUS	HIND
EURO cylinder ABUS KE50N 30/40 (nickel, 3 keys, oval button)		26.05 ?
EURO cylinder ABUS KE50N 35/50 (nickel, 3 keys, oval button)		24.63 ?
EURO cylinder ABUS KE50N 40/30 (nickel, 3 keys, oval button)		25.11 ?
EURO cylinder ABUS KE50N 40/40 (nickel, 3 keys, oval button)		25.31 ?
EURO cylinder ABUS KE50N 30/30 (nickel, 3 keys, oval button)		24.52 ?
EURO cylinder ABUS KE50N 35/35 (nickel, 3 keys, oval button)		27.21 ?