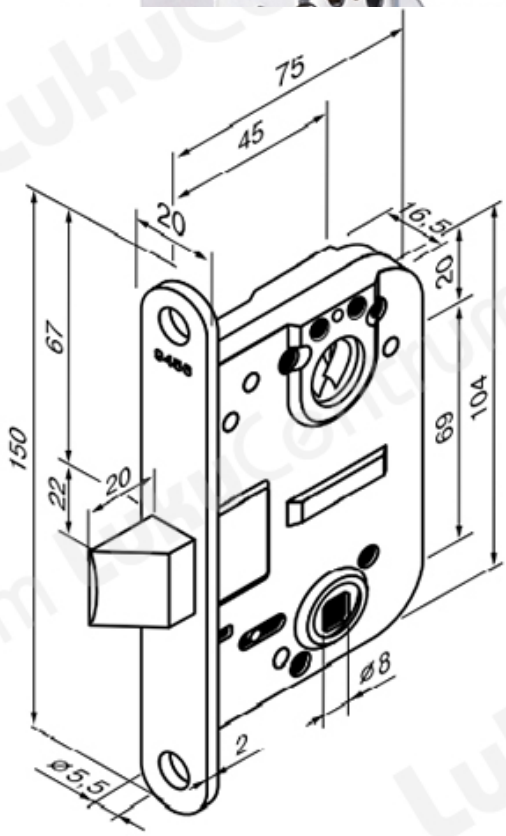TOOTENIMETUS	SOODUS	HIND
Lock case ABLOY 9456 Fe/ZL (right)	40.00 ?	45.71 ?
Lock case ABLOY 9456 Fe/ZL (left)	40.00 ?	45.71 ?