ABLOY WF56/152

Tootekirjeldus

- Material: zinc
- Surface treatments: white and chrome.
- Suitable for ventilation windows and hatches.

TOOTENIMETUS	SOODUS	HIND
ÐžÐºÐ¾Ð½Ð½Ð°Ñ• Ñ€Ñƒ‡ÐºÐ° ABLOY WF56/152 Zn/CR (Ð±Ð»ÐµÑ•Ñ,Ñ•Ñ‰Ð¸Ð¹ Ñ Ñ€Ð¾Ð¼, 40 Ð¼Ð¼, Ð±ÐµÐ· Ð²Ð¸Ð½Ñ,Ð¾Ð²)		7.60 €
ÐžÐºÐ¾Ð½Ð½Ð°Ñ• Ñ€Ñƒ‡ÐºÐ° ABLOY WF56/152 Zn/CR (Ð±Ð»ÐµÑ•Ñ,Ñ•Ñ‰Ð¸Ð¹ Ñ Ñ€Ð¾Ð¼, 40 Ð¼Ð¼)		10.89 €
ÐžÐºÐ¾Ð½Ð½Ð°Ñ• Ñ€Ñƒ‡ÐºÐ° ABLOY WF56/152 Zn/VAL (Ð±ÐµÐ»Ñ‹Ð¹ RAL 9010, 40 Ð¼Ð¼, Ð±ÐµÐ· Ð²Ð¸Ð½Ñ,Ð¾Ð²)		10.16 €
ÐžÐºÐ¾Ð½Ð½Ð°Ñ• Ñ€Ñƒ‡ÐºÐ° ABLOY WF56/152 Zn/VAL (Ð±ÐµÐ»Ñ‹Ð¹ RAL 9010, 40 Ð¼Ð¼)		10.81 €

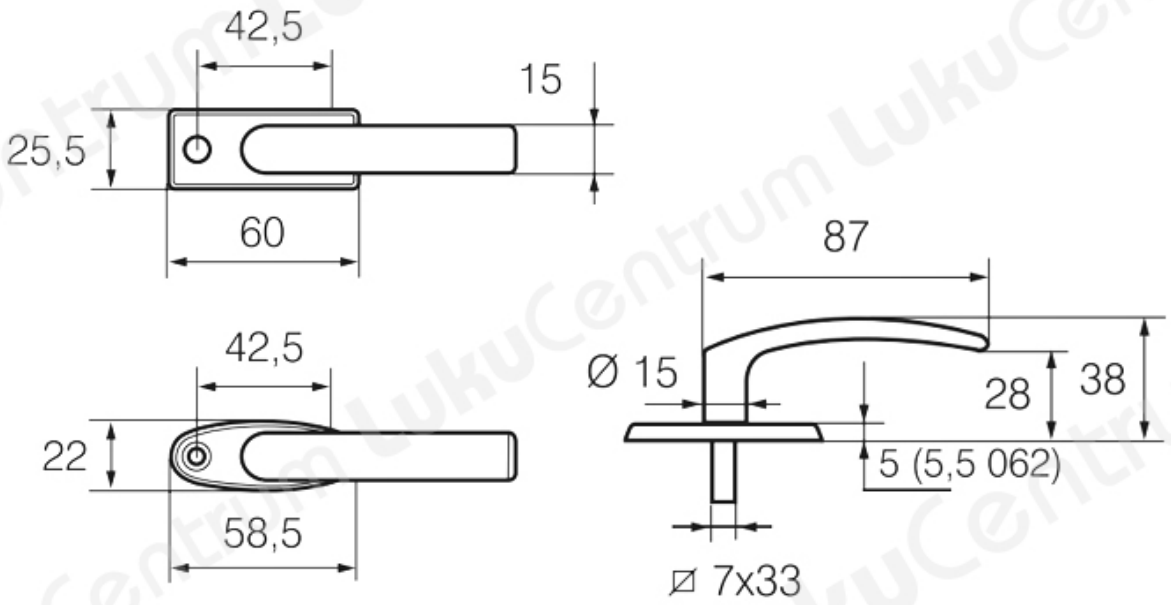

LukuCentrum