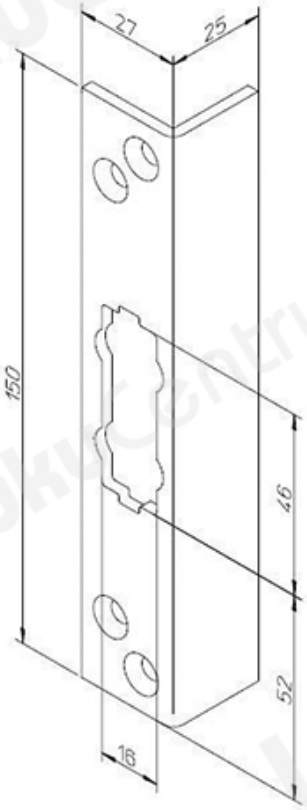TOOTENIMETUS	SOODUS	HIND
Striker plate ABLOY LP781 Fe/ZL (Rebated door)	22.37 ?	22.37 ?