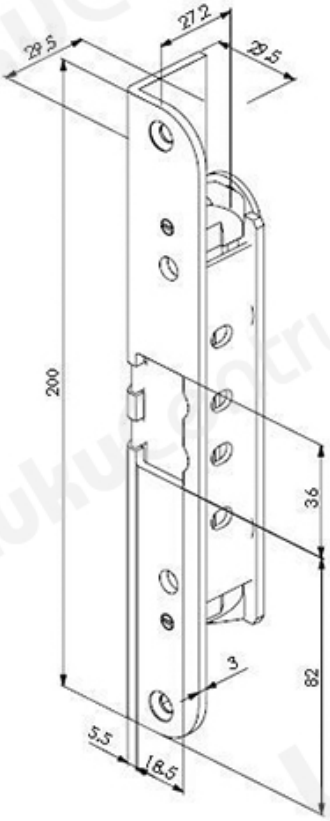| TOOTENIMETUS | SOODUS | HIND |
|---|---|---|
| **Compatibility:** [illegible], LC120, LC190, LE153, LC734, LE735, LC735, LC204, LC290, LC291, LE180, LE184, LE185 | 29.65 ? | 29.65 ? |
| Rebated stoker plate, ABLOY LC734, Fe/Zn (screws) | | |