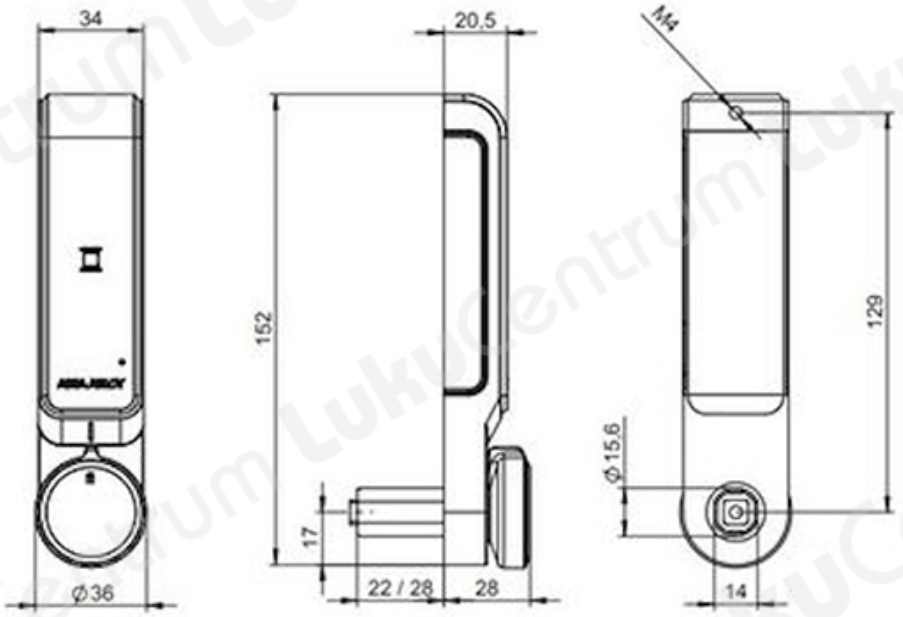TOOTENIMETUS	SOODUS	HIND
[illegible] Electronical Locker Lock ASSA ABLOY SENSE (short)		142.11 ?
Electronical Locker Lock ASSA ABLOY SENSE (long)		142.11 ?