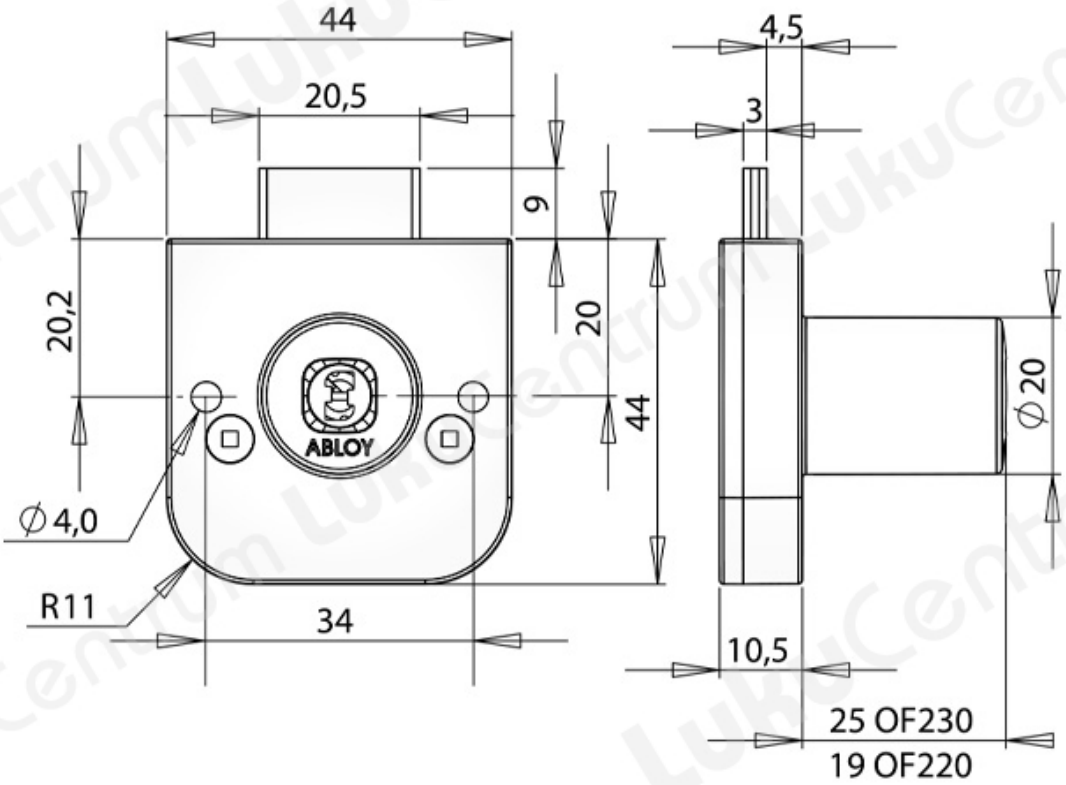TOOTENIMETUS	SOODUS	HIND
Cabinet lock ABLOY OF230N Protec (w/o keys)		0.00 ?
Cabinet lock ABLOY OF230N Protec (w 2 keys)		0.00 ?