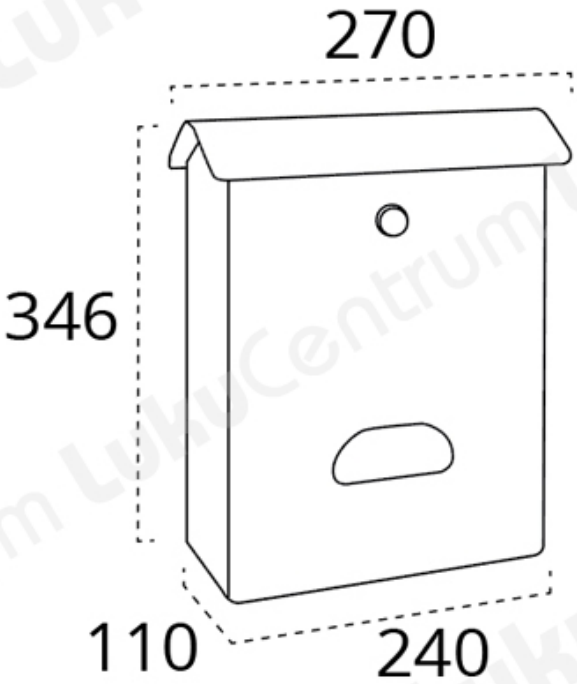TOOTENIMETUS	SOODUS	HIND
• [illegible] Resistant polystyrene. Non corrosive material. Ð?Ð¾Ñ?Ñ?Ð¾Ð²Ñ?Ð¹ Ñ•Ñ?Ð¸Ðº Arregui Classic E-1073 (Ð·ÐµÐ»Ñ?Ð½Ñ?Ð¹)		0.00 ?