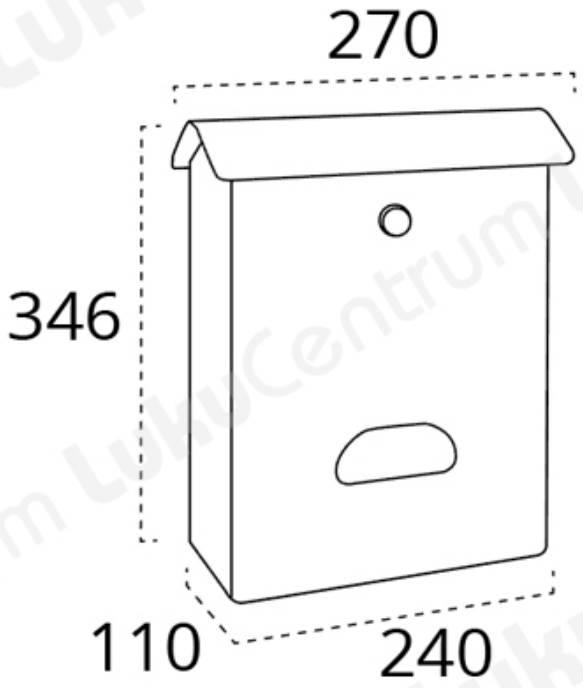TOOTENIMETUS	SOODUS	HIND
[illegible] Resistant polystyrene. Non corrosive material. Ð?Ð¾Ñ?Ñ?Ð¾Ð²Ñ?Ð¹ Ñ•Ñ?Ð¸Ðº Arregui Classic E-1071 (Ð±ÐµÐ»Ñ?Ð¹)		0.00 ?