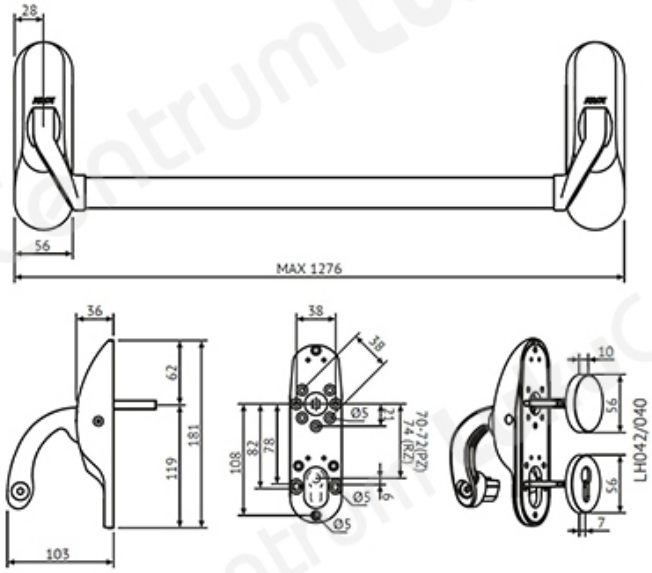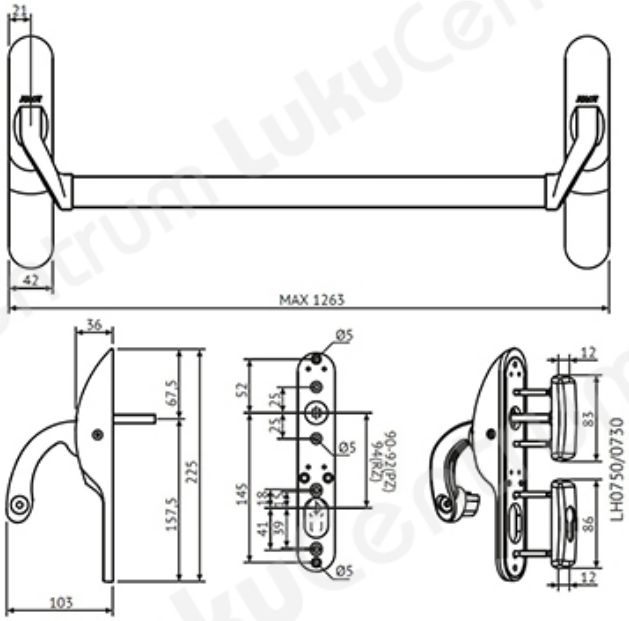TOOTENIMETUS	SOODUS	HIND
Panic bars ABLOY PBE011 (painted aluminum)		676.03 ?
Panic bars ABLOY PBE011 (painted gray, for euro lock)		675.76 ?
Panic bars ABLOY PBE011 (brushed nickel)		691.51 ?