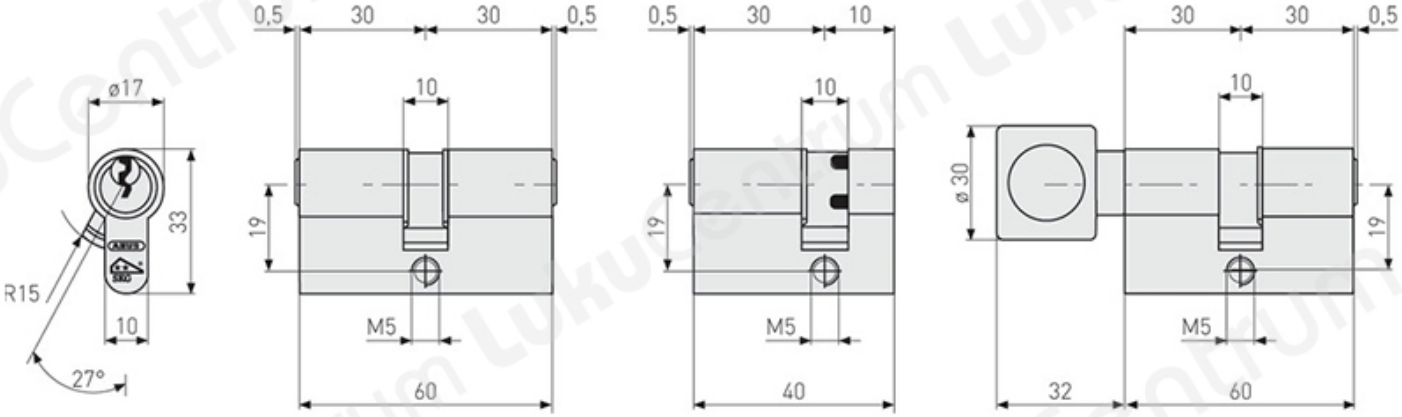TOOTENIMETUS	SOODUS	HIND
EURO Ñ?Đ¸Đ»Đ¸Đ½Đ´Ñ? ABUS E60N 30/30 (Đ¼Đ¸ĐºĐ»Ñ?Ñ?Đ°Đ¼Đ¸)		27.45 ?
EURO Ñ?Đ¸Đ»Đ¸Đ½Đ´Ñ? ABUS E60N 45/45 (Đ½Đ¸ĐºĐµĐ»Ñ?, 3 ĐºĐ»Ñ?Ñ?Đ°Đ¼Đ¸)		27.45 ?