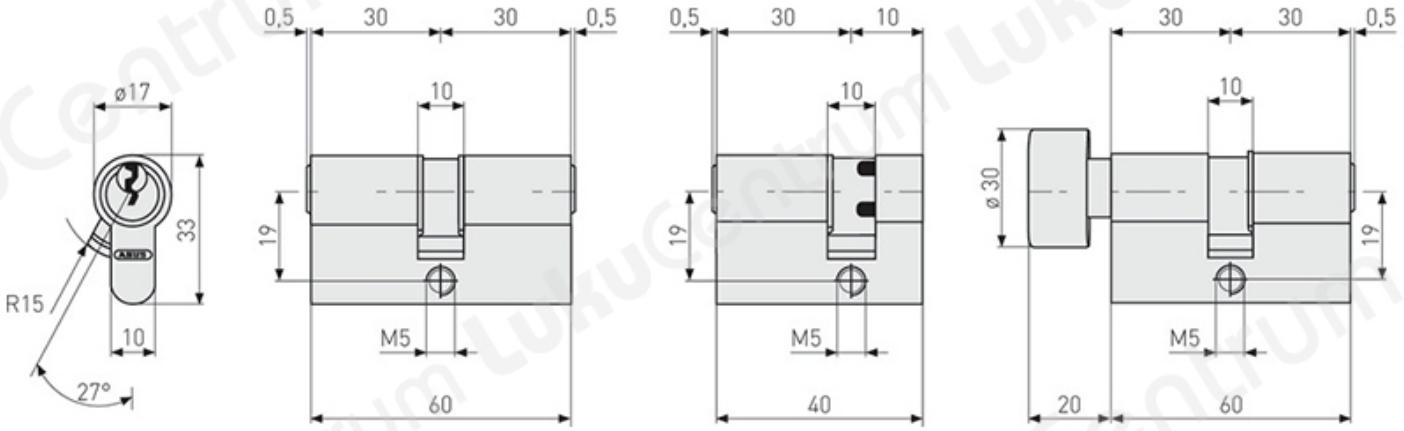TOOTENIMETUS	SOODUS	HIND
EURO Ñ?Đ¸Đ»Đ¸Đ½Đ´Ñ? ABUS E50N 28/34 (Đ½Đ¸ĐºĐµĐ»Ñ?, 3 ĐºĐ»Ñ?Ñ?Đ°Đ¼Đ¸)		14.52 ?
EURO Ñ?Đ¸Đ»Đ¸Đ½Đ´Ñ? ABUS E50N 30/30 (Đ½Đ¸ĐºĐµĐ»Ñ?, 3 ĐºĐ»Ñ?Ñ?Đ°Đ¼Đ¸)		14.52 ?
EURO Ñ?Đ¸Đ»Đ¸Đ½Đ´Ñ? ABUS E50N 30/35 (Đ½Đ¸ĐºĐµĐ»Ñ?, 3 ĐºĐ»Ñ?Ñ?Đ°Đ¼Đ¸)		15.86 ?
EURO Ñ?Đ¸Đ»Đ¸Đ½Đ´Ñ? ABUS E50N 30/40 (Đ½Đ¸ĐºĐµĐ»Ñ?, 3 ĐºĐ»Ñ?Ñ?Đ°Đ¼Đ¸)		17.26 ?
EURO Ñ?Đ¸Đ»Đ¸Đ½Đ´Ñ? ABUS E50N 30/45 (Đ½Đ¸ĐºĐµĐ»Ñ?, 3 ĐºĐ»Ñ?Ñ?Đ°Đ¼Đ¸)		18.67 ?
EURO Ñ?Đ¸Đ»Đ¸Đ½Đ´Ñ? ABUS E50N 30/50 (Đ½Đ¸ĐºĐµĐ»Ñ?, 3 ĐºĐ»Ñ?Ñ?Đ°Đ¼Đ¸)		18.67 ?
EURO Ñ?Đ¸Đ»Đ¸Đ½Đ´Ñ? ABUS E50N 35/35 (Đ½Đ¸ĐºĐµĐ»Ñ?, 3 ĐºĐ»Ñ?Ñ?Đ°Đ¼Đ¸)		17.26 ?
EURO Ñ?Đ¸Đ»Đ¸Đ½Đ´Ñ? ABUS E50N 35/50 (Đ½Đ¸ĐºĐµĐ»Ñ?, 3 ĐºĐ»Ñ?Ñ?Đ°Đ¼Đ¸)		21.47 ?
EURO Ñ?Đ¸Đ»Đ¸Đ½Đ´Ñ? ABUS E50N 35/55 (Đ½Đ¸ĐºĐµĐ»Ñ?, 3 ĐºĐ»Ñ?Ñ?Đ°Đ¼Đ¸)		23.00 ?
EURO Ñ?Đ¸Đ»Đ¸Đ½Đ´Ñ? ABUS E50N 40/40 (Đ½Đ¸ĐºĐµĐ»Ñ?, 3 ĐºĐ»Ñ?Ñ?Đ°Đ¼Đ¸)		20.25 ?
EURO Ñ?Đ¸Đ»Đ¸Đ½Đ´Ñ? ABUS E50N 45/45 (Đ½Đ¸ĐºĐµĐ»Ñ?, 3 ĐºĐ»Ñ?Ñ?Đ°Đ¼Đ¸)		23.00 ?