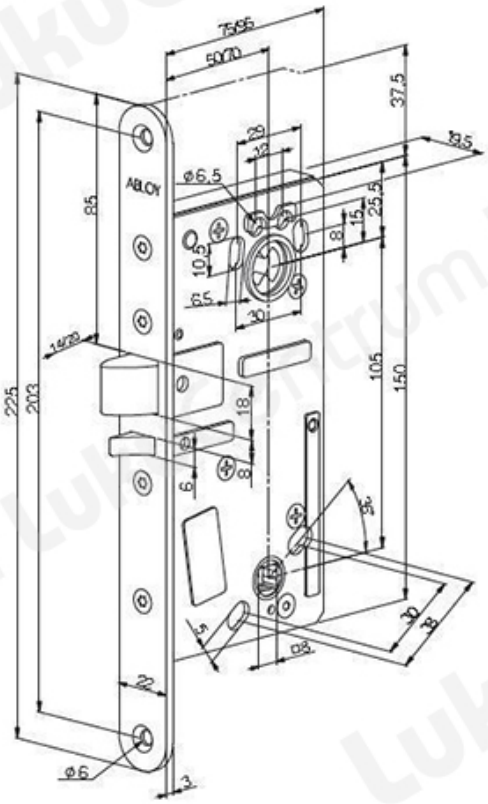TOOTENIMETUS	SOODUS	HIND
Solenoid lock Abloy EL582/50 mm		520.54 ?
Solenoid lock Abloy EL582/70 mm		551.24 ?