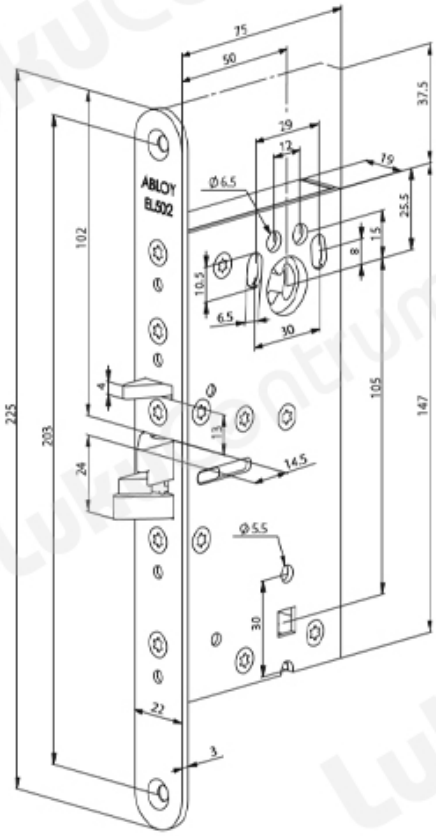TOOTENIMETUS	SOODUS	HIND
Solenoid lock Abloy EL502/50 mm (locked without power, without a striker plate and a cable)		396.91 ?
Solenoid lock Abloy EL502/50 mm (unlocked without power, without a striker plate and a cable)		396.91 ?