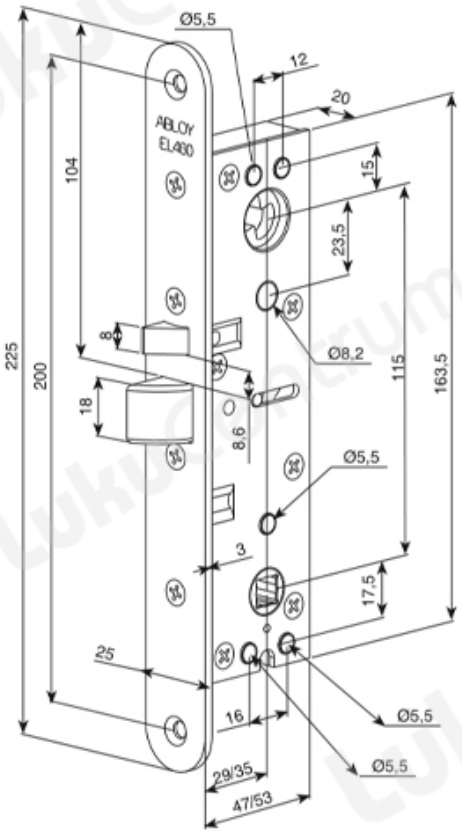TOOTENIMETUS	SOODUS	HIND
Solenoid lock Abloy EL480/35 (front plate 25 mm, incl. split spindle)		624.65 ?
Solenoid lock Abloy EL480/29 (front plate 25 mm, incl. split spindle)		624.69 ?