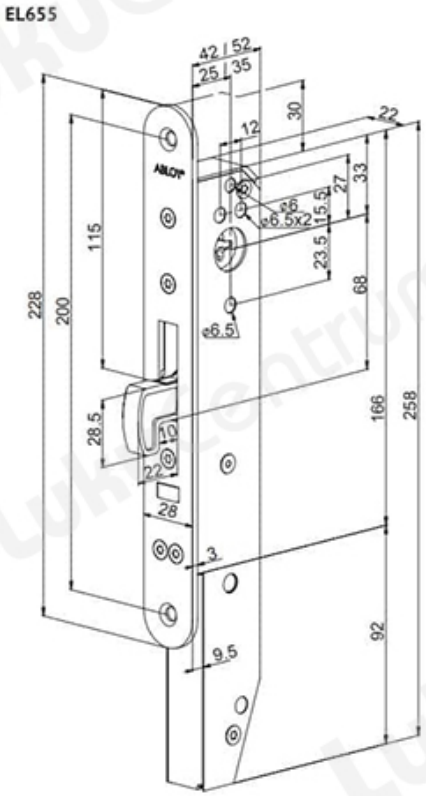TOOTENIMETUS	SOODUS	HIND
Motor lock Abloy EL655/25 EA300+EA470 (front plate 28 mm)		1430.13 ?
Motor lock Abloy EL655/35 EA300+EA470 (front plate 28 mm)		1430.13 ?
Motor lock Abloy EL655/25 EA300+EA470 (front plate 32 mm)		1430.12 ?
Motor lock Abloy EL655/35 EA300+EA470 (front plate 32 mm)		1430.07 ?