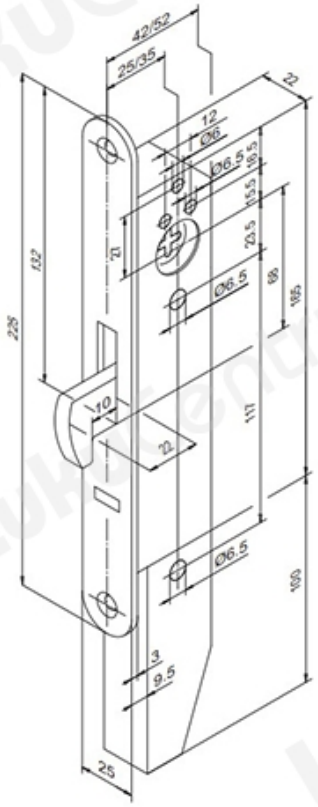TOOTENIMETUS	SOODUS	HIND
[illegible] shopping centers and business premises Ð?Ð¾Ñ?Ð¾Ñ?Ð½Ñ?Ð¹ Ð·Ð°Ð¼Ð¾Ðº Abloy EL654/35 EA300 (Ð±ÐµÐ·Ñ?ÐµÐ½Ñ?Ñ?Ð¾Ð¼ Ñ?Ð¿Ñ?Ð°Ð²Ð»ÐµÐ½Ð¸Ñ•)		1154.77 ?