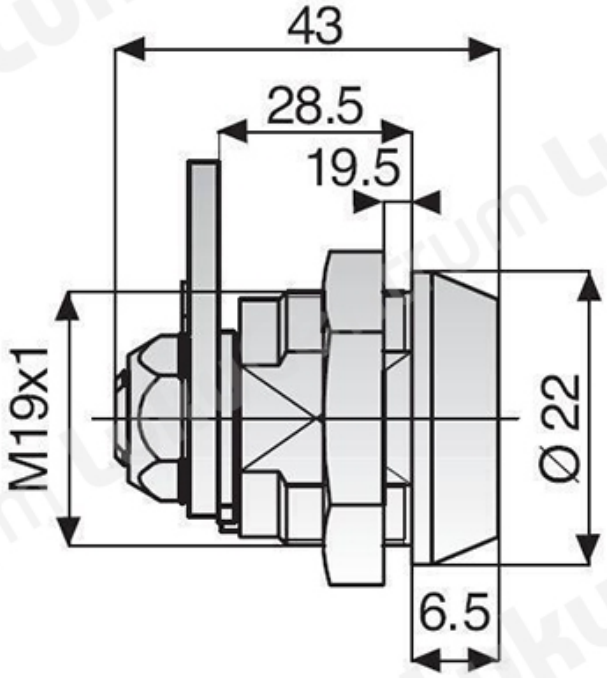TOOTENIMETUS	SOODUS	HIND
Ð?Ð°Ð¼Ð¾Ð° Ð´Ð»Ñ• Ð¼ÐµÑ?Ð°Ð»Ð»Ð¸Ñ?ÐµÑ•ÐºÐ¸Ñ Ñ?ÐºÐ°Ñ?Ð¾Ð² ABLOY CL106C Classic (c 2 ÐºÐ»Ñ?Ñ?Ð°Ð¼Ð¸)		45.90 ?
Ð?Ð°Ð¼Ð¾Ð° Ð´Ð»Ñ• Ð¼ÐµÑ?Ð°Ð»Ð»Ð¸Ñ?ÐµÑ•ÐºÐ¸Ñ Ñ?ÐºÐ°Ñ?Ð¾Ð² ABLOY CL106C Classic (Ð±ÐµÐ· ÐºÐ»Ñ?Ñ?ÐµÐ¹)		41.38 ?
Ð?Ð°Ð¼Ð¾Ð° Ð´Ð»Ñ• Ð¼ÐµÑ?Ð°Ð»Ð»Ð¸Ñ?ÐµÑ•ÐºÐ¸Ñ Ñ?ÐºÐ°Ñ?Ð¾Ð² ABLOY CL106T Protec2 (c 2 ÐºÐ»Ñ?Ñ?Ð°Ð¼Ð¸)		124.90 ?