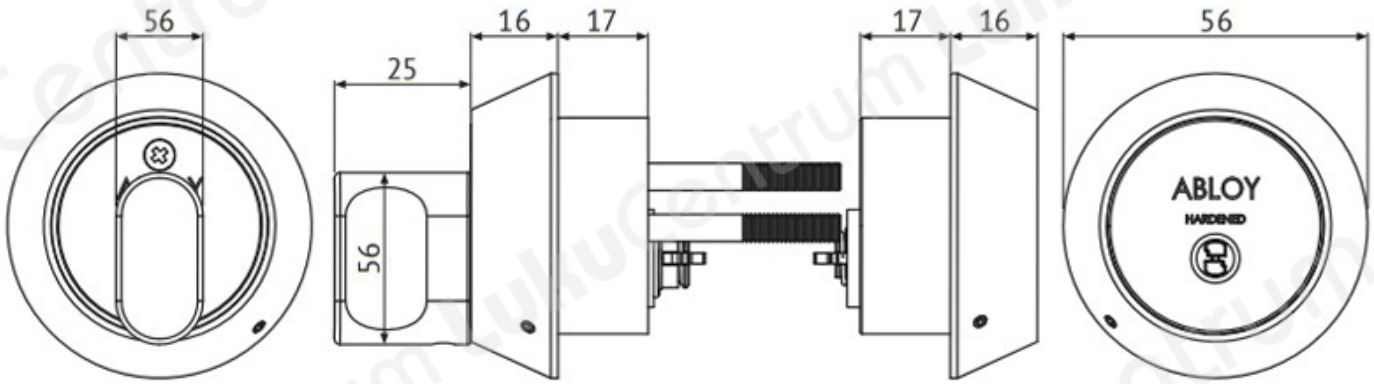TOOTENIMETUS	SOODUS	HIND
Ð¦Ð¸Ð»Ð¸Ð½Ð´Ñ? ABLOY CY204U Novel CR (Ð±Ð»ÐµÑ•Ñ?Ñ•Ñ?Ð¸Ð¹ Ñ Ñ?Ð¾Ð¼, c 3 ÐºÐ»Ñ?Ñ?Ð°Ð¼Ð¸)		290.10 ?
Ð¦Ð¸Ð»Ð¸Ð½Ð´Ñ? ABLOY CY204U Novel CR (Ð±Ð»ÐµÑ•Ñ?Ñ•Ñ?Ð¸Ð¹ Ñ Ñ?Ð¾Ð¼, Ð±ÐµÐ· ÐºÐ»Ñ?Ñ?ÐµÐ¹)		229.19 ?
Ð¦Ð¸Ð»Ð¸Ð½Ð´Ñ? ABLOY CY204U Novel HCR (Ð¼Ð°Ñ?Ð¾Ð²Ñ?Ð¹ Ñ Ñ?Ð¾Ð¼, c 3 ÐºÐ»Ñ?Ñ?Ð°Ð¼Ð¸)		319.10 ?
Ð¦Ð¸Ð»Ð¸Ð½Ð´Ñ? ABLOY CY204U Novel HCR (Ð¼Ð°Ñ?Ð¾Ð²Ñ?Ð¹ Ñ Ñ?Ð¾Ð¼, Ð±ÐµÐ· ÐºÐ»Ñ?Ñ?ÐµÐ¹)		246.90 ?