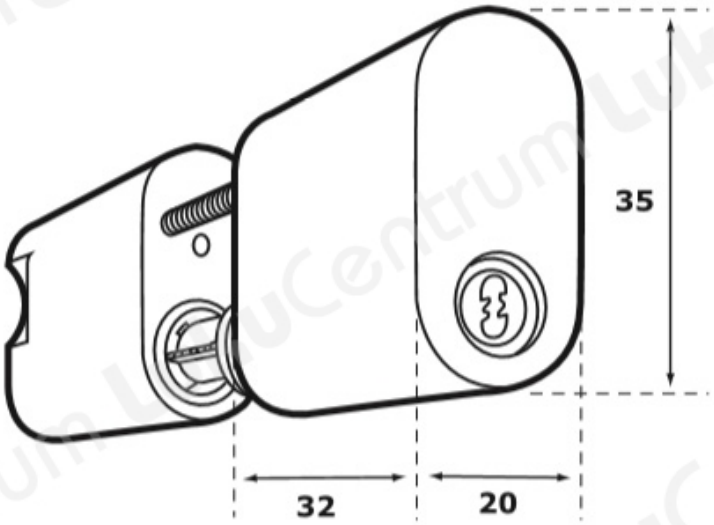| TOOTENIMETUS | SOODUS | HIND |
|---|---|---|
| [illegible] | [illegible] | [illegible] |
| Ð¦Ð¸Ð¸Ð½Ð´Ñ? ABLOY CY202U Novel CR (Ð±Ð»ÐµÑ•Ñ?Ñ•Ñ?Ð¸Ð¹ Ñ Ñ?Ð¾Ð¼, c 3 ÐºÐ»Ñ?Ñ?Ð°Ð¼Ð¸) | 132.95 ? | 166.19 ? |
| Ð¦Ð¸Ð¸Ð½Ð´Ñ? ABLOY CY202U Novel CR (Ð±Ð»ÐµÑ•Ñ?Ñ•Ñ?Ð¸Ð¹ Ñ Ñ?Ð¾Ð¼, Ð±ÐµÐ· ÐºÐ»Ñ?Ñ?ÐµÐ¹) | | 117.67 ? |
| Ð¦Ð¸Ð»Ð¸Ð½Ð´Ñ? ABLOY CY202U Novel HCR (Ð¼Ð°Ñ?Ð¾Ð²Ñ?Ð¹ Ñ Ñ?Ð¾Ð¼, c 3 ÐºÐ»Ñ?Ñ?Ð°Ð¼Ð¸) | 146.18 ? | 182.73 ? |
| Ð¦Ð¸Ð»Ð¸Ð½Ð´Ñ? ABLOY CY202U Novel HCR (Ð¼Ð°Ñ?Ð¾Ð²Ñ?Ð¹ Ñ Ñ?Ð¾Ð¼, Ð±ÐµÐ· ÐºÐ»Ñ?Ñ?ÐµÐ¹) | | 129.43 ? |
| Ð¦Ð¸Ð»Ð¸Ð½Ð´Ñ? ABLOY CY202U Novel MS/HaLa (Ð¼Ð°Ñ?Ð¾Ð²Ð°Ñ• Ð»Ð°Ñ?Ñ?Ð½Ñ?, c 3 ÐºÐ»Ñ?Ñ?Ð°Ð¼Ð¸) | 159.58 ? | 199.47 ? |