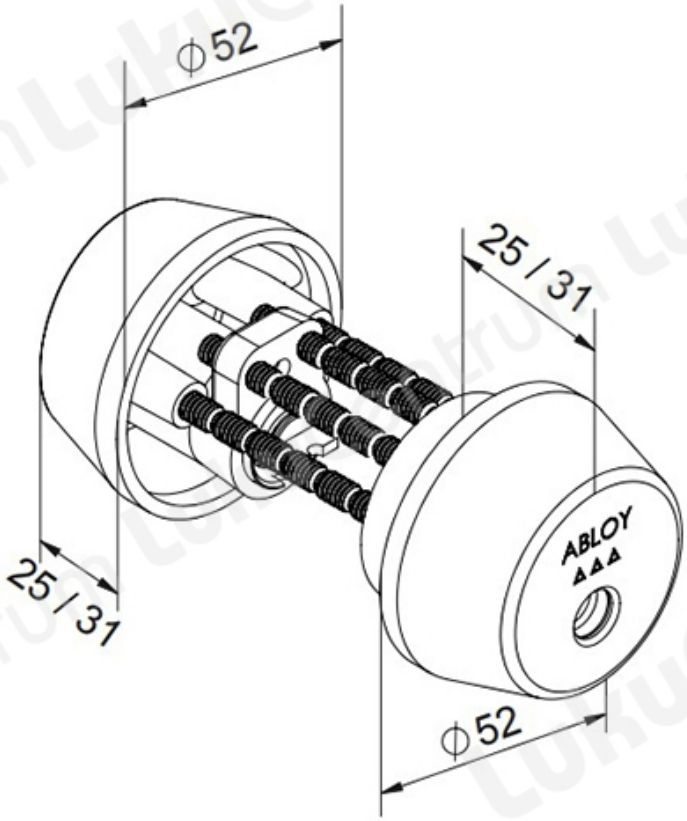TOOTENIMETUS	SOODUS	HIND
Ð¦Ð¸Ð¸Ð½Ð´Ñ? ABLOY CY062T Protec2 CR (Ð±Ð»ÐµÑ•Ñ?Ñ•Ñ?Ð¸Ð¹ Ñ Ñ?Ð¾Ð¼, с 3 ÐºÐ»Ñ?Ñ?Ð°Ð¼Ð¸)		331.86 ?
Ð¦Ð¸Ð¸Ð½Ð´Ñ? ABLOY CY062T Protec2 CR (Ð±Ð»ÐµÑ•Ñ?Ñ•Ñ?Ð¸Ð¹ Ñ Ñ?Ð¾Ð¼, Ð±ÐµÐ· ÐºÐ»Ñ?Ñ?ÐµÐ¹)		250.31 ?
Ð¦Ð¸Ð»Ð¸Ð½Ð´Ñ? ABLOY CY062T Protec2 HCR (Ð¼Ð°Ñ?Ð¾Ð²Ñ?Ð¹ Ñ Ñ?Ð¾Ð¼, с 3 ÐºÐ»Ñ?Ñ?Ð°Ð¼Ð¸)		365.05 ?
Ð¦Ð¸Ð»Ð¸Ð½Ð´Ñ? ABLOY CY062T Protec2 HCR (Ð¼Ð°Ñ?Ð¾Ð²Ñ?Ð¹ Ñ Ñ?Ð¾Ð¼, Ð±ÐµÐ· ÐºÐ»Ñ?Ñ?ÐµÐ¹)		275.40 ?
Ð¦Ð¸Ð»Ð¸Ð½Ð´Ñ? ABLOY CY062T Protec2 NiHa (Ð¼Ð°Ñ?Ð¾Ð²Ñ?Ð¹ Ð½Ð¸ÐºÐµÐ»Ñ?, с 3 ÐºÐ»Ñ?Ñ?Ð°Ð¼Ð¸)		381.63 ?
Ð¦Ð¸Ð¸Ð½Ð´Ñ? ABLOY CY062T Protec2 NiHa (Ð¼Ð°Ñ?Ð¾Ð²Ñ?Ð¹ Ð½Ð¸ÐºÐµÐ»Ñ?, Ð±ÐµÐ· ÐºÐ»Ñ?Ñ?ÐµÐ¹)		287.94 ?