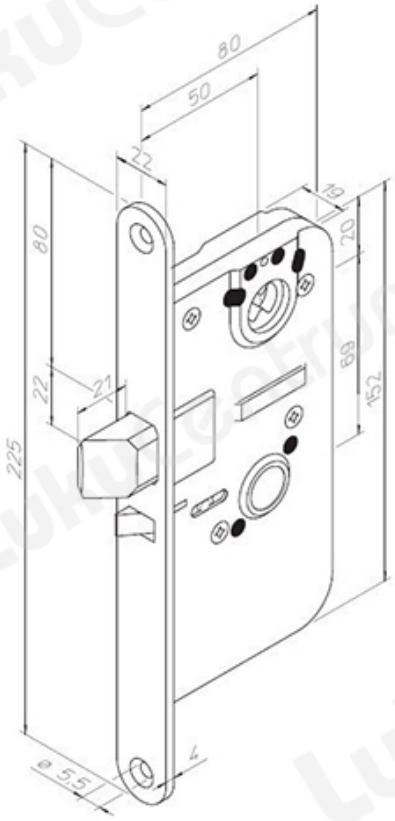TOOTENIMETUS	SOODUS	HIND
Ð?Ð¾Ñ?Ð¿Ñ?Ñ• Ð·Ð°Ð¼ÐºÐ° ABLOY LC194 Fe/ZL (Ð¿Ñ?Ð°Ð²Ð°Ñ•)	82.91 ?	94.75 ?
Ð?Ð¾Ñ?Ð¿Ñ?Ñ• Ð·Ð°Ð¼ÐºÐ° ABLOY LC194 Fe/ZL (Ð»ÐµÐ²Ð°Ñ•)	82.91 ?	94.75 ?