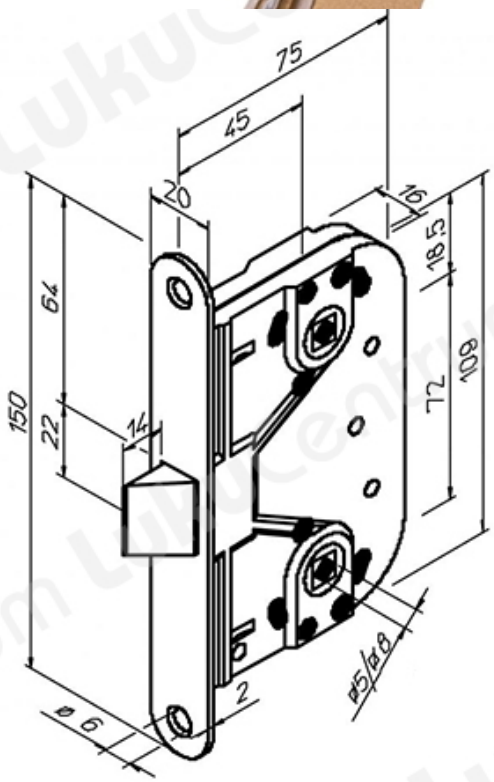TOOTENIMETUS	SOODUS	HIND
Ð?Ð¾Ñ?Ð¿Ñ?Ñ• Ð·Ð°Ð¼ÐºÐ° ABLOY 414 Fe/MME (Ñ?Ð´Ð¾Ð±Ñ•Ñ?Ð²Ð¾ Ñ?Ð½Ð¸Ð²ÐµÑ?Ñ•Ð°Ð»Ñ?Ð½Ð¾Ð µ)	13.80 ?	15.77 ?
Ð?Ð¾Ñ?Ð¿Ñ?Ñ• Ð·Ð°Ð¼ÐºÐ° ABLOY 414 Fe/ZN (Ñ?Ð´Ð¾Ð±Ñ•Ñ?Ð²Ð¾ Ñ?Ð½Ð¸Ð²ÐµÑ?Ñ•Ð°Ð»Ñ?Ð½Ð¾Ð µ)	13.80 ?	15.77 ?