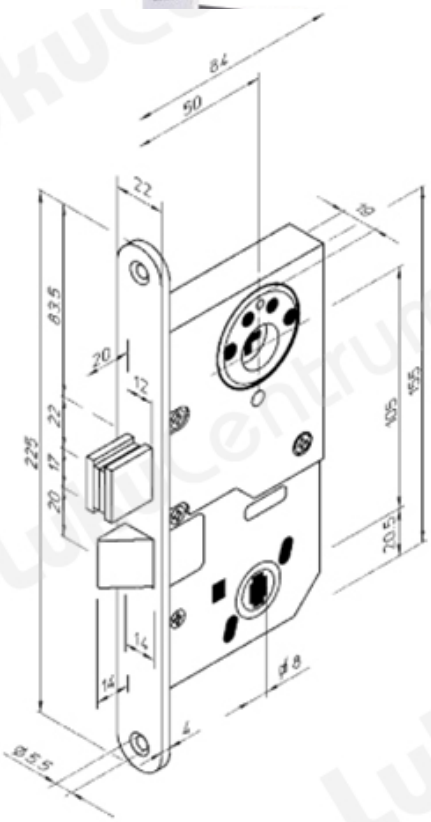TOOTENIMETUS	SOODUS	HIND
[illegible]	[illegible]	[illegible]
Lock case ABLOY LC210/50 Fe/ZL (left)	114.34 ?	190.56 ?
Lock case ABLOY LC210/50 Fe/ZL (right)	114.34 ?	190.56 ?