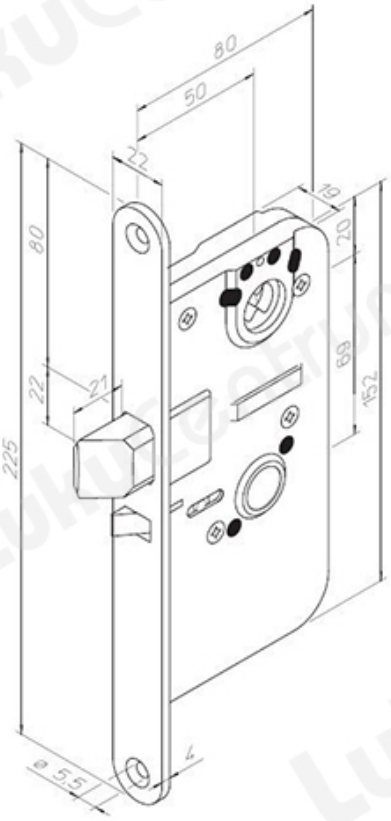TOOTENIMETUS	SOODUS	HIND
Lock case ABLOY LC194 Fe/ZL (right)	82.91 ?	94.75 ?
Lock case ABLOY LC194 Fe/ZL (left)	82.91 ?	94.75 ?